ROHS Compatible

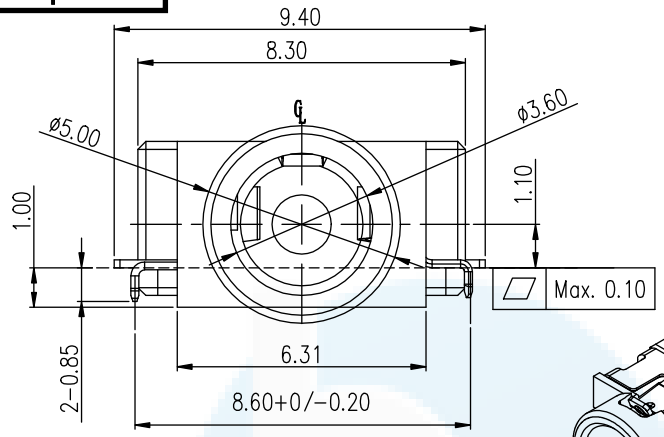

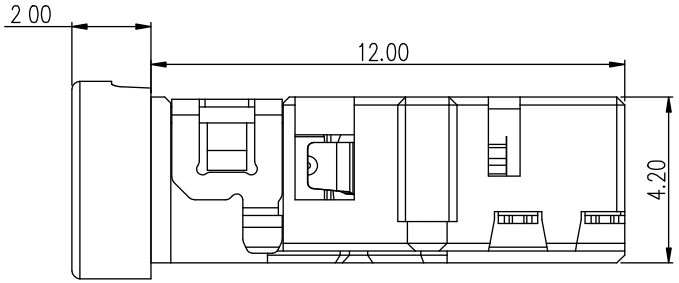

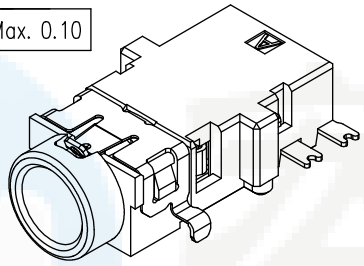

3D VIEW

NOTES:

1. REQUEST OF THE SPECIFICATION:
1.1 CONTACT CURRENT RATING: 1A.;
1.2 CONTACT RESISTANCE: 100 mΩ MAX.;
1.3 INSULATION RESISTANCE: 100MΩ MIN.;
1.4 DIELECTRIC WITHSTANDING: 500V AC MIN.;
1.5 DURABILITY: 5,000 CYCLES MIN.;
1.6 CONNECTOR MATING FORCES: 29.8N (3.00Kgf) MAX.;
1.7 CONNECTOR UNMATING FORCES: 2.98N (0.30Kgf) MIN.;

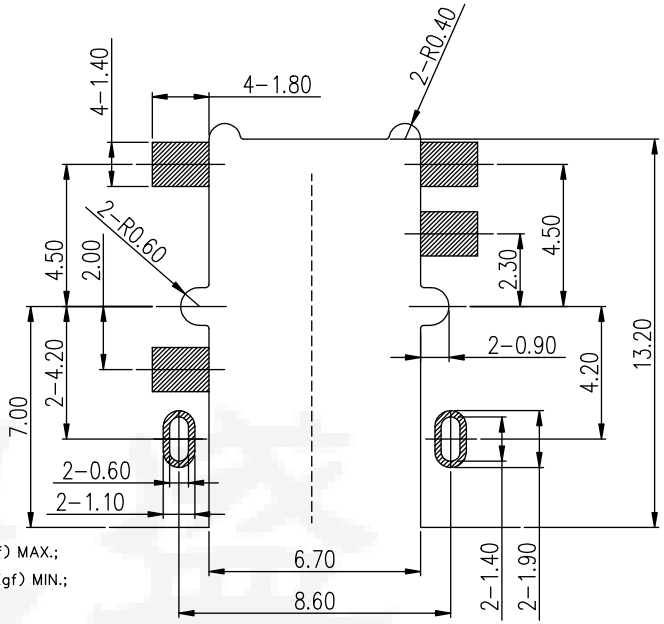

RECOMMENDED PCB LAYOUT(TOP VIEW)

(GENERAL TOLERANCE: ±0.05)

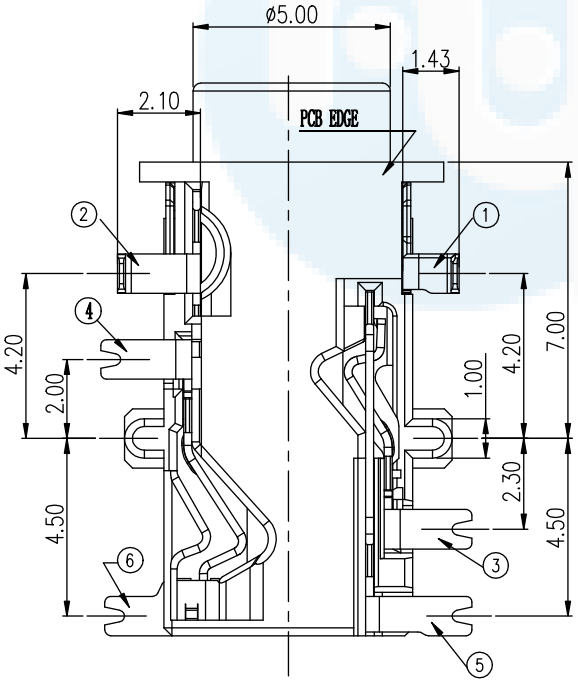

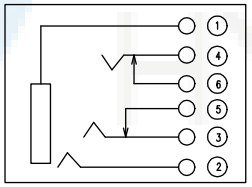

SCHEMATIC

PLUG SPEC

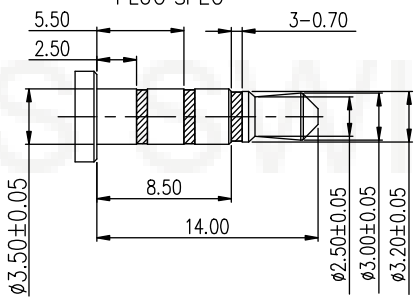

ITEM	NAME	Q'TY	DESCRIPTION	NOTE
7	TERMINAL 6#	1	PHOSPHOR BRONZE; NICKEL UNDER PLATING OVERALL,GOLD FLASH ON SOLDER AREA	T=0.20
6	TERMINAL 5#	1	PHOSPHOR BRONZE; NICKEL UNDER PLATING OVERALL,GOLD FLASH ON SOLDER AREA	T=0.20
5	TERMINAL 4#	1	PHOSPHOR BRONZE; NICKEL UNDER PLATING OVERALL,GOLD FLASH ON SOLDER AREA ;GOLD FLASH ON CONTACT AREA	T=0.20
4	TERMINAL 3#	1	PHOSPHOR BRONZE; NICKEL UNDER PLATING OVERALL,GOLD FLASH ON SOLDER AREA ;GOLD FLASH ON CONTACT AREA	T=0.20
3	TERMINAL 2#	1	PHOSPHOR BRONZE; NICKEL UNDER PLATING OVERALL,GOLD FLASH ON SOLDER AREA ;GOLD FLASH ON CONTACT AREA	T=0.20
2	TERMINAL 1#	1	PHOSPHOR BRONZE; NICKEL UNDER PLATING OVERALL,GOLD FLASH ON SOLDER AREA ;GOLD FLASH ON CONTACT AREA	T=0.20
1	HOUSING	1	PPA COLOR BLACK	

DESIGN	Li Jinwei	SCALL	
DRAWING	Wu Qifa	UNIT	mm
CHECK	Zheng Jinxian	SIZE	A4: 210 * 297
APPROVAL	Liu Xiaohong	DATE	2020-06-10

TOLERANCE
X.X ±0.30 X.°±2°
.XX ±0.20 .X° ±1°
.XXX ±0.10 .XX°±0.5°

DRAWG NO. PJ-422

TITLE: Φ3.5mm耳机插座 沉板前插后贴

东莞市宏煜盛实业有限公司
Dongguan hongyusheng Industry Co., Ltd
TEL: 0769-81230179 https://www.hystypec.com