ROHS
Compatible

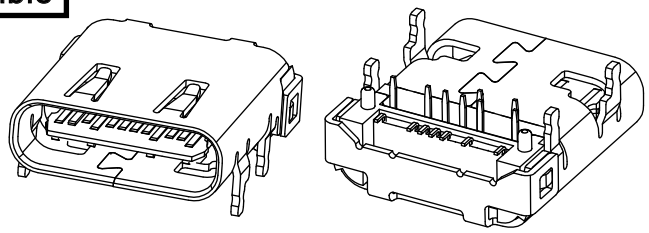

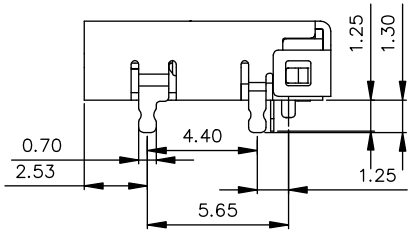

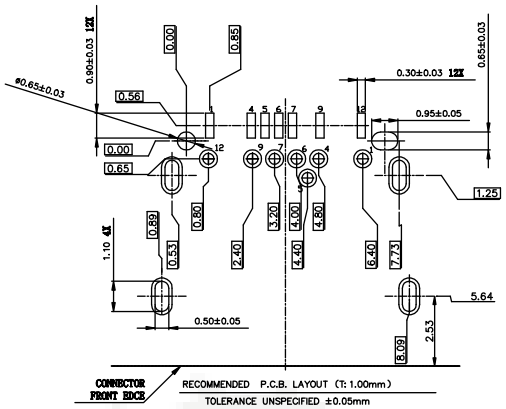

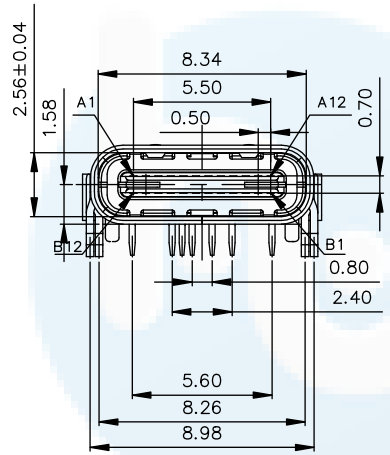

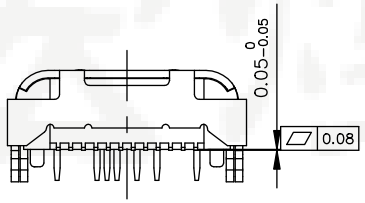

NOTES:

1.MATERIAL:
- MOLDING: LCP UL94 V-0
- CONTACT: COPPER ALLOY.
  - GOLD PLATED Min ON CONTACT AREA,100u"
  - Min TIN (LEAD FREE) ON SOLDER AREA,
- SHELL: SUS304-H,T=0.30±0.03mm
  - 50u" NICKEL PLATING OVER ALL.
- SHILD: SUS304-H,T=0.12±0.03mm

2.MECHANICAL:
- INSERTION: 5~20N.
- EXTRACTION: 8~20N AFTER TEST.
- DURABILITY: 10000 CYCLES

3.ELECTRICAL:
- CURRENT: 5A FOR VBUS;
  - 1.25A FOR GND PIN.
  - 0.25A FOR OTHER.
- VOLTAGE: 20 V MAX
- WITHSTANDING VOLTAGE: 100V AC R.M.S.
- CONTACT RESISTANCE: 40mΩ MAX.
- INSULATION RESISTANCE: 100MΩ MIN.

4.ENVIRONMENTAL
- TEMPERATURE RANGE -25°C ~ +85°C

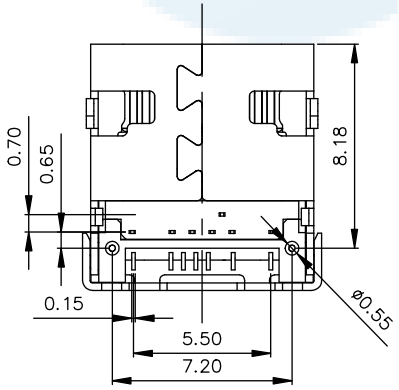

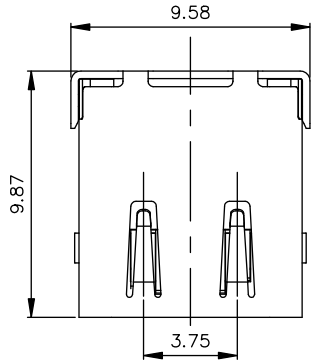

DESIGN	Li Jinwei	SCALL	
DRAWING	Wu Qifa	UNIT	mm
CHECK	Zheng Jinxian	SIZE	A4: 210 * 297
APPROVAL	Liu Xiaohong	DATE	2020-06-10

TOLERANCE
X.X ±0.30 X.°±2°
.XX ±0.20 .X° ±1°
.XXX ±0.10 .XX°±0.5°

DRAWG NO. TYPE-C-DST14PZ987

TITLE: 14P前插后贴DIP+SMT 9.87L

东莞市宏煜盛实业有限公司
Dongguan hongyusheng Industry Co., Ltd
TEL: 0769-81230179 https://www.hystypec.com