ROHS Compatible

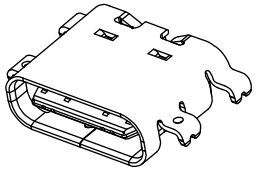

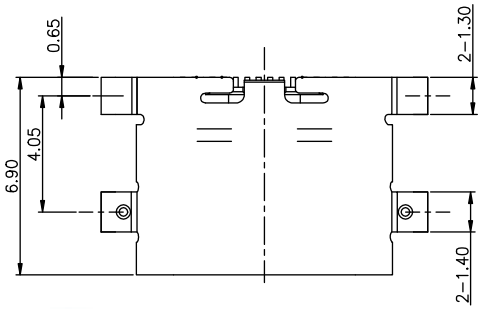

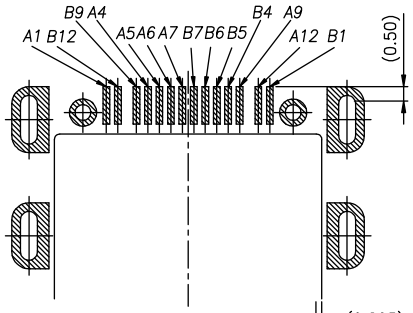

MATING CONDITION (REF.)

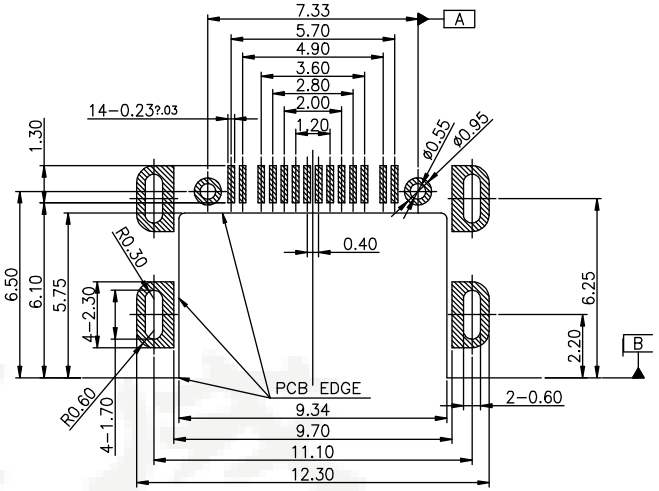

RECOMMENDED PCB PAD LAYOUT

TOLERANCE:0.05mm

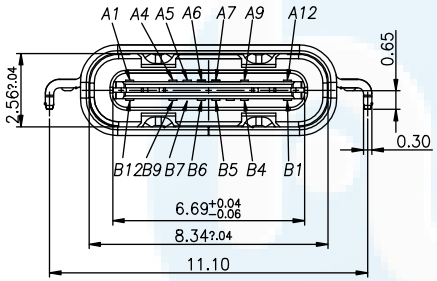

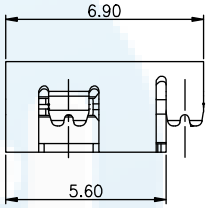

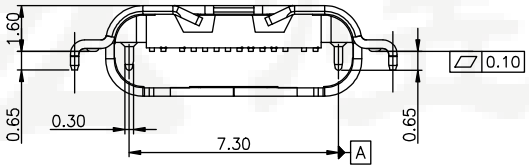

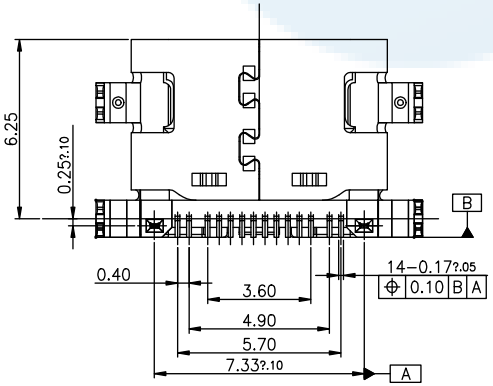

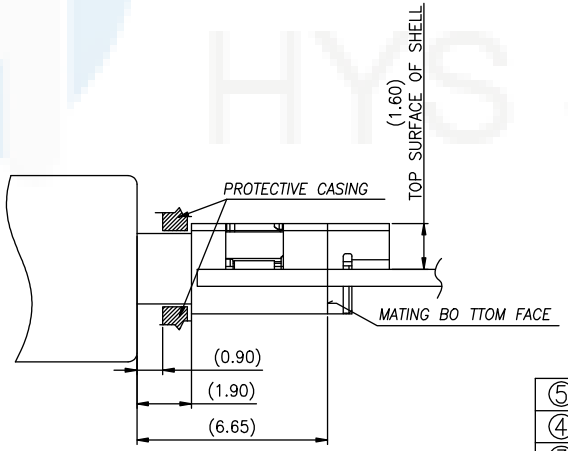

MATING CONDITION (REF.)

NOTES:

1. MATERIAL: SEE "TABLE 1";
2. FINISH: SEE "TABLE 1";
3. ELECTRICAL:
   3.1. CURRENT RATING: 6A(VBUS PIN 1.5A/PIN), 5A(GND PIN 1.25A/PIN MAX),0.25A/PIN(OTHER PIN);
   3.2. INSULATION RESISTANCE :100 MΩ MIN. AT 250VDC;
   3.3. DIEELECTRIC WITHSTANDING VOLTAGE:100VAC MIN;
   3.4. CONTACT RESISTANCE : INITIAL 40mΩ MAX; AFTER 50mΩ MAX;
4. MECHANICAL:
   4.1. MATING FORCE: 5~20N.;
   4.2. UNMATING FORCE: 8~20N(INITIAL),6~20N(AFTER 10000 CYCLES);
   4.3. FREQUENCE:200±50 CYCLES/HOUR,10000 CYCLES.;
5. ENVIRONMENTAL:
   5.1. OPERATION: -40°C~+80°C.

PIN	SIGNAL NAME	PIN	SIGNAL NAME
A1	GND	B12	GND
A4	VBUS	B9	VBUS
A5	CC1		
A6	DP1	B7	DN2
A7	DN1	B6	DP2
		B5	CC2
A9	VBUS	B4	VBUS
A12	GND	B1	GND

NO.	PART NAME	QTY	MATERIAL	DESCRIPTION	REMARK
⑤	MID PLATE	1	STAINLESS STEEL	Au . PLATING.	T=0.15mm
④	SHELL	1	STAINLESS STEEL	Au . PLATING.	T=0.30mm
③	TERMINAL-B	1	TABLE 2:	TABLE 2:	T=0.12mm
②	TERMINAL-A	1			T=0.12mm
①	INSULATOR	1	HIGH TEMP	Black	

DESIGN	Li Jinwei	SCALL	
DRAWING	Wu Qifa	UNIT	mm
CHECK	Zheng Jinxian	SIZE	A4: 210 * 297
APPROVAL	Liu Xiaohong	DATE	2020-06-10

TOLERANCE

X.X ±0.30 X.°±2°
.XX ±0.20 .X° ±1°
.XXX ±0.10 .XX°±0.5°

DRAWG NO. TYPE-C-CDS14P160

TITLE: 14P沉板1.6四脚插板SMT

东莞市宏煜盛实业有限公司
Dongguan hongyusheng Industry Co., Ltd
TEL: 0769-81230179 https://www.hystypec.com