ROHS
Compatible

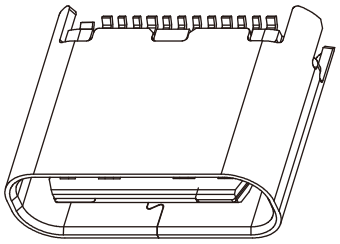

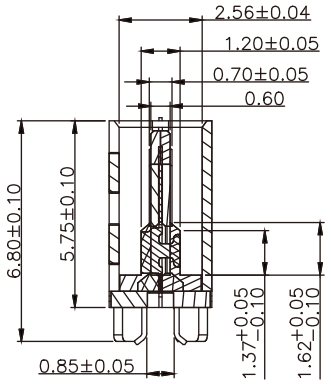

截面 A-A

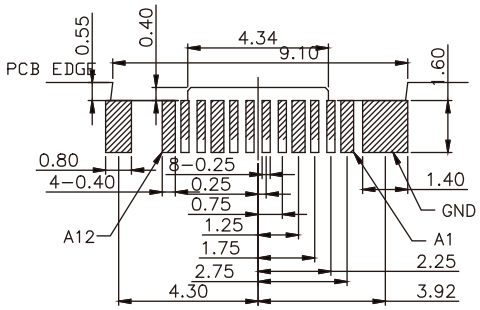

RECOMMEND PCB LAYOUT
TOP VIEW

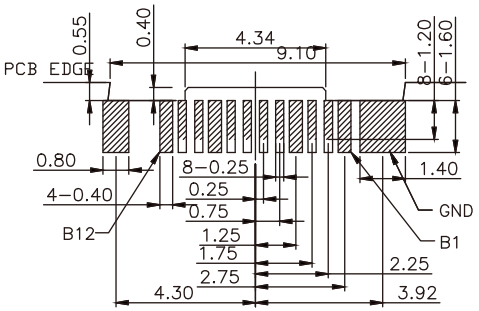

RECOMMEND PCB LAYOUT
BOTTOM VIEW

RECOMMENDED P.C.B. LAYOUT (T:0.80mm)
TOLERANCE UNSPECIFIED ±0.05mm

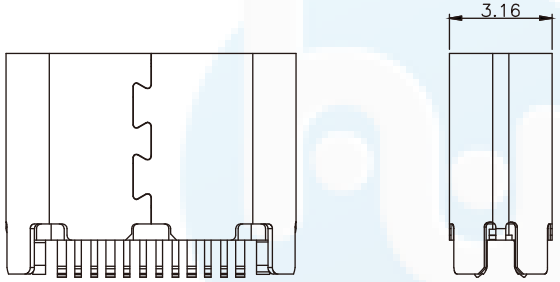

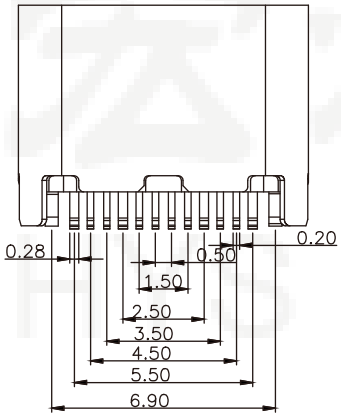

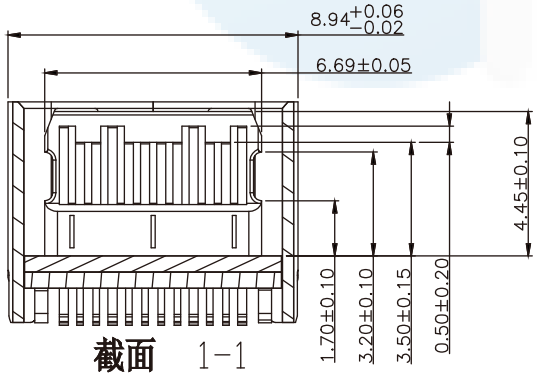

截面 1-1

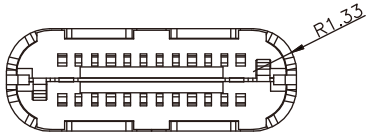

NOTES:
1.MATERIAL:
MOLDING: LCP UL94 V-0
CONTACT:COPPER ALLOY.
GOLD PLATED Min ON CONTACT AREA,100u''
Min TIN (LEAD FREE) ON SOLDER AREA,
SHELL: SUS304-H,T=0.30±0.03mm
50u" NICKEL PLATING OVER ALL.
SHILD:SUS304-H,T=0.12±0.03mm
2.MECHANICAL:
INSERTION: 5~20N.
EXTRACTION: 8~20N AFTER TEST.
DURABILITY: 10000 CYCLES
3.ELECTRICAL:
CURRENT: 5A FOR VBUS;
1.25A FOR GND PIN.
0.25A FOR OTHER.
VOLTAGE: 20 V MAX
WITHSTANDING VOLTAGE: 100V AC R.M.S.
CONTACT RESISTANCE: 40mΩ MAX.
INSULATION RESISTANCE: 100MΩ MIN.
4.ENVIRONMENTAL
TEMPERATURE RANGE -25°C ~ +85°C

A1	GND	B12	GND
A2	SSTXP1	B11	SSRXP1
A3	SSTXN1	B10	SSRXN1
A4	VBUS	B9	VBUS
A5	CC1	B8	SBU2
A6	DP1	B7	DN2
A7	DN1	B6	DP2
A8	SBU1	B5	CC2
A9	VBUS	B4	VBUS
A10	SSRXN2	B3	SSTXN2
A11	SSRXP2	B2	SSTXP2
A12	GND	B1	GND
PIN	SIGNAL NAME	PIN	SIGNAL NAME

DESIGN	Li Jinwei	SCALL	
DRAWING	Wu Qifa	UNIT	mm
CHECK	Zheng Jinxian	SIZE	A4: 210 * 297
APPROVAL	Liu Xiaohong	DATE	2020-06-10

TOLERANCE
X.X ±0.30 X.°±2°
.XX ±0.20 .X° ±1°
.XXX ±0.10 .XX°±0.5°

DRAWG NO.
TYPE-C-B3S24P

TITLE:
双排24P立式直插夹板短体

东莞市宏煜盛实业有限公司
Dongguan hongyusheng Industry Co., Ltd
TEL: 0769-81230179 https://www.hystypec.com