ROHS Compatible

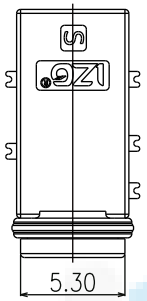

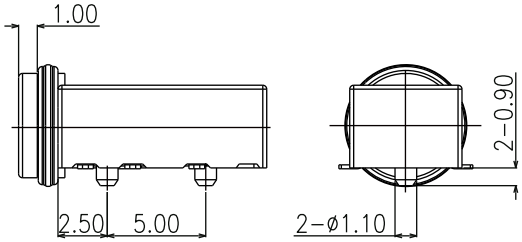

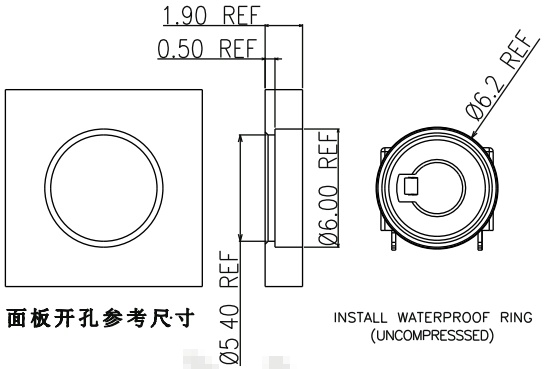

面板开孔参考尺寸

INSTALL WATERPROOF RING
(UNCOMPRESSSED)

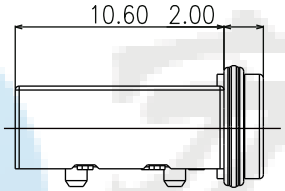

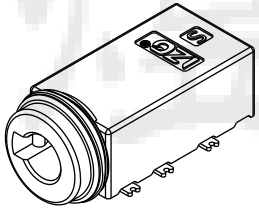

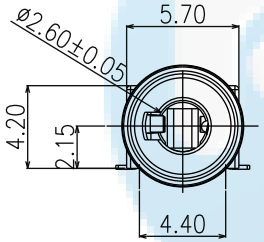

NOTES
1. CURRENT RATING: 1A.
2. CONTACT RESISTANCE: 100mΩ MAX.
3. INSULATION RESISTANCE: 100MΩ MIN.
4. DIELECTRIC WITHSTANDING: 500V AC MIN.
5. DURABILITY: 5000 CYCLES MIN.
6. CONNECTOR MATING FORCES: 3~30N.
7. CONNECTOR UNMATING CORCES: 3~30N.
8. OPERATING TEMPERATURE: −25℃ TO +85℃.
9. WATERPROOF LEVEL: IP67

PJ	xA	082-	05	x	x
↓	↓	↓	↓	↓	↓
名称	规格 2.5	流水号	PIN位 5;脚	S;贴片	F;防水

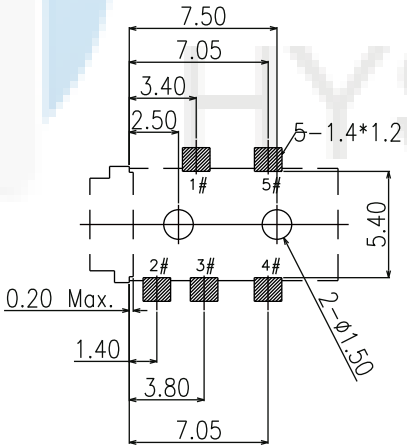

RECOMMEND PCB LAYOUT
TOLERANCE: ±0.05

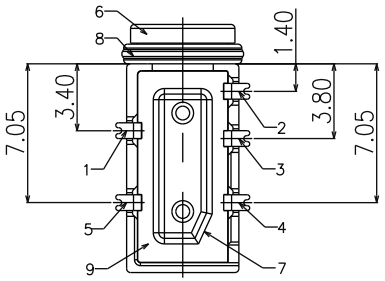

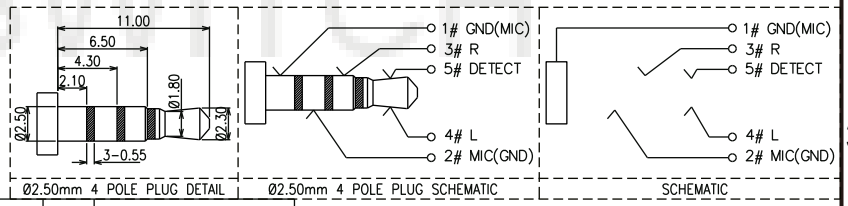

Ø2.50mm 4 POLE PLUG DETAIL | Ø2.50mm 4 POLE PLUG SCHEMATIC | SCHEMATIC

Not to install the waterproof ring shipment

ITEM	NAME	Q'TY	DESCRIPTION
9		1	EPOXY; BLACK
8		1	SILICONE; BLACK
7		1	HIGH TEMPERATURE; BLACK
6		1	HIGH TEMPERATURE; BLACK
5	TERMINAL 5#	1	STAINLESS STEEL; NICKEL UNDERPLATING OVERALL, GOLD FLASH PLATING ON THE SOLDER & CONTACT AREA
4	TERMINAL 4#	1	STAINLESS STEEL; NICKEL UNDERPLATING OVERALL, GOLD FLASH PLATING ON THE SOLDER & CONTACT AREA
3	TERMINAL 3#	1	PHOSPHOR BRONZE; NICKEL UNDERPLATING OVERALL, GOLD FLASH PLATING ON THE SOLDER & CONTACT AREA
2	TERMINAL 2#	1	PHOSPHOR BRONZE; NICKEL UNDERPLATING OVERALL, GOLD FLASH PLATING ON THE SOLDER & CONTACT AREA
1	TERMINAL 1#	1	STAINLESS STEEL; NICKEL UNDERPLATING OVERALL, GOLD FLASH PLATING ON THE SOLDER & CONTACT AREA

DESIGN	Li Jinwei	SCALL	
DRAWING	Wu Qifa	UNIT	mm
CHECK	Zheng Jinxian	SIZE	A4: 210 * 297
APPROVAL	Liu Xiaohong	DATE	2020-06-10

TOLERANCE
X.X ±0.30 X.°±2°
.XX ±0.20 .X° ±1°
.XXX ±0.10 .XX°±0.5°

DRAWG NO. PJ25A082-05SF

TITLE: Φ2.5mm 防水耳机插座 五脚贴片 IP67

东莞市宏煜盛实业有限公司
Dongguan hongyusheng Industry Co., Ltd
TEL: 0769-81230179 https://www.hystypec.com